B1 INSTALLATION DRAWING

IF THIS DOCUMENT IS PRINTED IN HARDCOPY, IT IS FOR INFORMATION USE ONLY AND THEREFORE IS NOT SUBJECT TO UPDATING CONTROLS. ALWAYS REFER TO SOLIDWORKS VIEWER FOR LATEST ISSUE

FIRST ANGLE PROJECTION

THIS DRAWING IS CONFIDENTIAL AND IS SUPPLIED ON THE EXPRESS CONDITION THAT IT SHALL NOT BE LOANED OR COPIED OR DISCLOSED TO ANY OTHER PERSON OR USED FOR ANY OTHER PURPOSE WITHOUT THE WRITTEN CONSENT OF AP RACING LTD.

AP Racing
Wheler Road
Coventry
CV3 4LB
Tel: +44 024 7663 9595
Fax: +44 024 7663 9559
e-mail: sales@apracing.co.uk
Web site: HTTP://www.apracing.com

© AP Racing Ltd. 2014

Issue No.	Alterations: Date & No.	Alterations: Particulars	Zone	Initials
1	28/04/14 B6957	FIRST ISSUE	#	JH

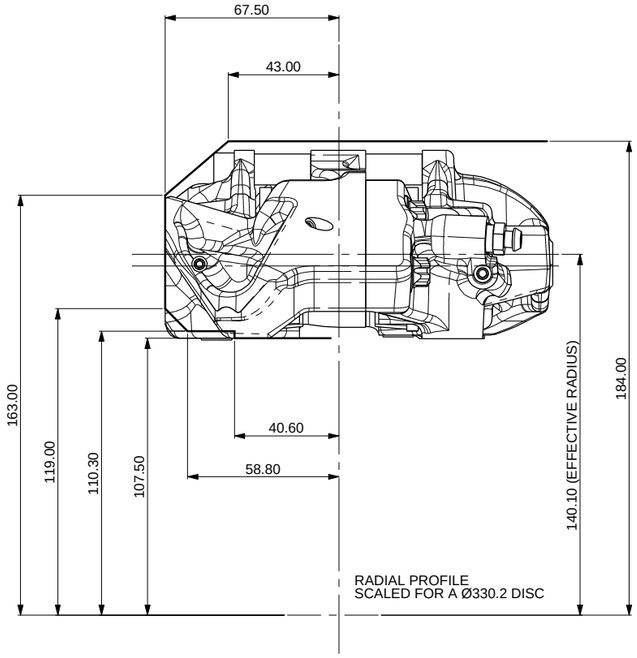

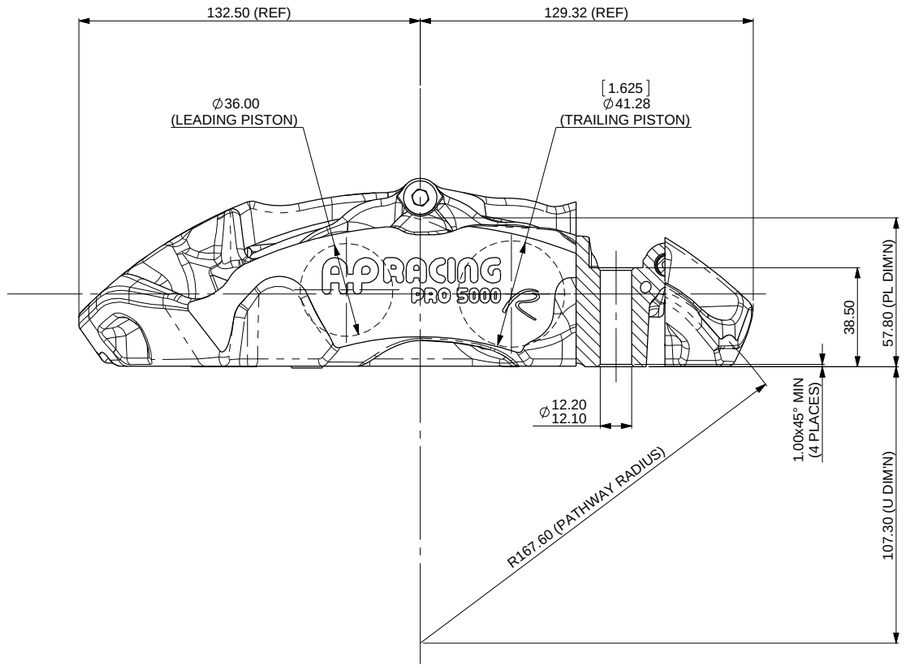

GENERAL DESCRIPTION
4 PISTON DIFFERENTIAL BORE CALIPER TO SUIT UP TO 330.2 x 28 IRON DISC.

APPLICATION
GENERAL USE CALIPER

TECHNICAL INFORMATION
TOTAL PISTON AREA: 47.12cm²
BODY MATERIAL: ALUMINIUM ALLOY
PISTON MATERIAL: STAINLESS STEEL

ASSEMBLY WEIGHT (LESS PADS): 2.16Kg

INSTALLATION INFORMATION
DISC & CALIPER MOUNTING TOLERANCES TO BE SUCH THAT THE DISC IS CENTRAL TO THE CALIPER TO WITHIN ±0.5mm.
DISC DIAMETRAL CLEARANCE SHOULD BE 2.5mm NOMINAL FROM DISC O/D TO PATHWAY.

KEY TO DIMENSIONS
'PL' DIMN : TOP OF PAD MATERIAL TO MOUNTING BOSS FACE, WITH PAD SITTING DOWN ON LEDGE.
'U' DIMN : WHEEL CENTRE LINE TO CALIPER MOUNTING BOSS FACE = (DISC Ø/2) - PL DIMN

AP RACING TECHNICAL SECTION WILL BE PLEASED TO ADVISE ON THE MOST SUITABLE EQUIPMENT FOR ANY PARTICULAR APPLICATION.

CALIPER PART NUMBERS
CP9440-2S4L - RIGHT HAND
CP9440-3S4L - LEFT HAND

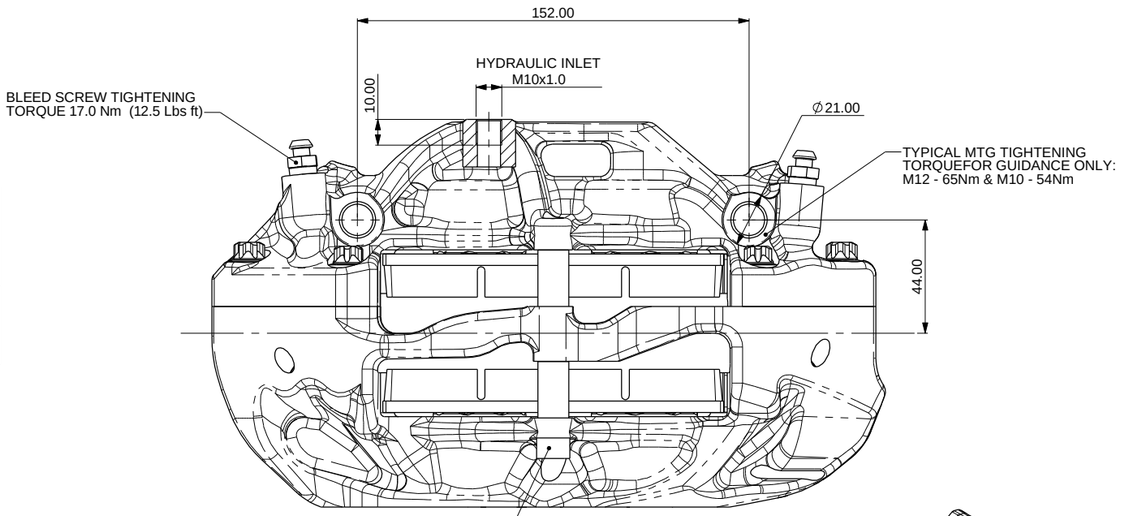

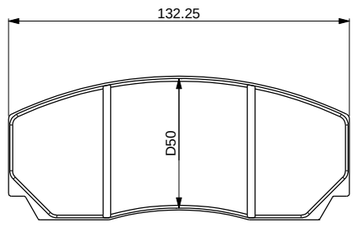

CP3215 PAD FAMILY
PAD AREA - 57.37CM³
PAD VOLUME - 97.53CM³

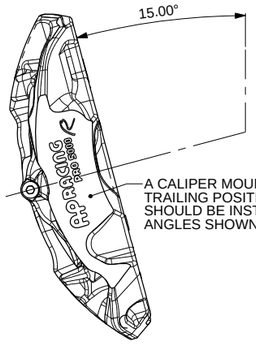

A CALIPER MOUNTED IN THE TRAILING POSITION (BEHIND AXLE) SHOULD BE INSTALLED BETWEEN ANGLES SHOWN FOR OTIMUM BLEED

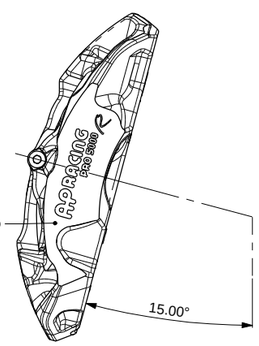

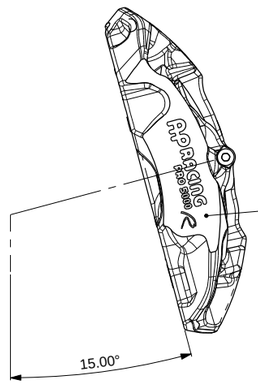

A CALIPER MOUNTED IN THE LEADING POSITION (IN FRONT OF AXLE) SHOULD BE INSTALLED BETWEEN ANGLES SHOWN FOR OPTIMUM BLEED

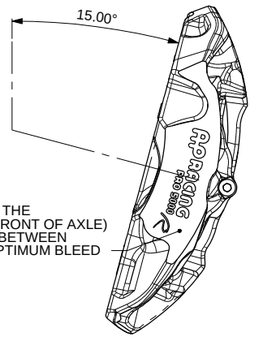

SCALE 1:1	SHEET 1 OF 2
DRAWN	J.HERITAGE
APPROVED	
DERIVED FROM	#

TITLE
GENERAL USE 4-PISTON BRAKE CALIPER

DRG NO. CP9440-1CD

B1 INSTALLATION DRAWING

IF THIS DOCUMENT IS PRINTED IN HARDCOPY, IT IS FOR INFORMATION USE ONLY AND THEREFORE IS NOT SUBJECT TO UPDATING CONTROLS. ALWAYS REFER TO SOLIDWORKS VIEWER FOR LATEST ISSUE

FIRST ANGLE PROJECTION

THIS DRAWING IS CONFIDENTIAL AND IS SUPPLIED ON THE EXPRESS CONDITION THAT IT SHALL NOT BE LOANED OR COPIED OR DISCLOSED TO ANY OTHER PERSON OR USED FOR ANY OTHER PURPOSE WITHOUT THE WRITTEN CONSENT OF AP RACING LTD.

AP Racing
Wheler Road
Coventry
CV3 4LB
Tel: +44 024 7663 9595
Fax: +44 024 7663 9559
e-mail: sales@apracing.co.uk
Web site: HTTP://www.apracing.com

© AP Racing Ltd. 2014

Issue No.	Alterations		Zone	Initials
	Date & No.	Particulars		

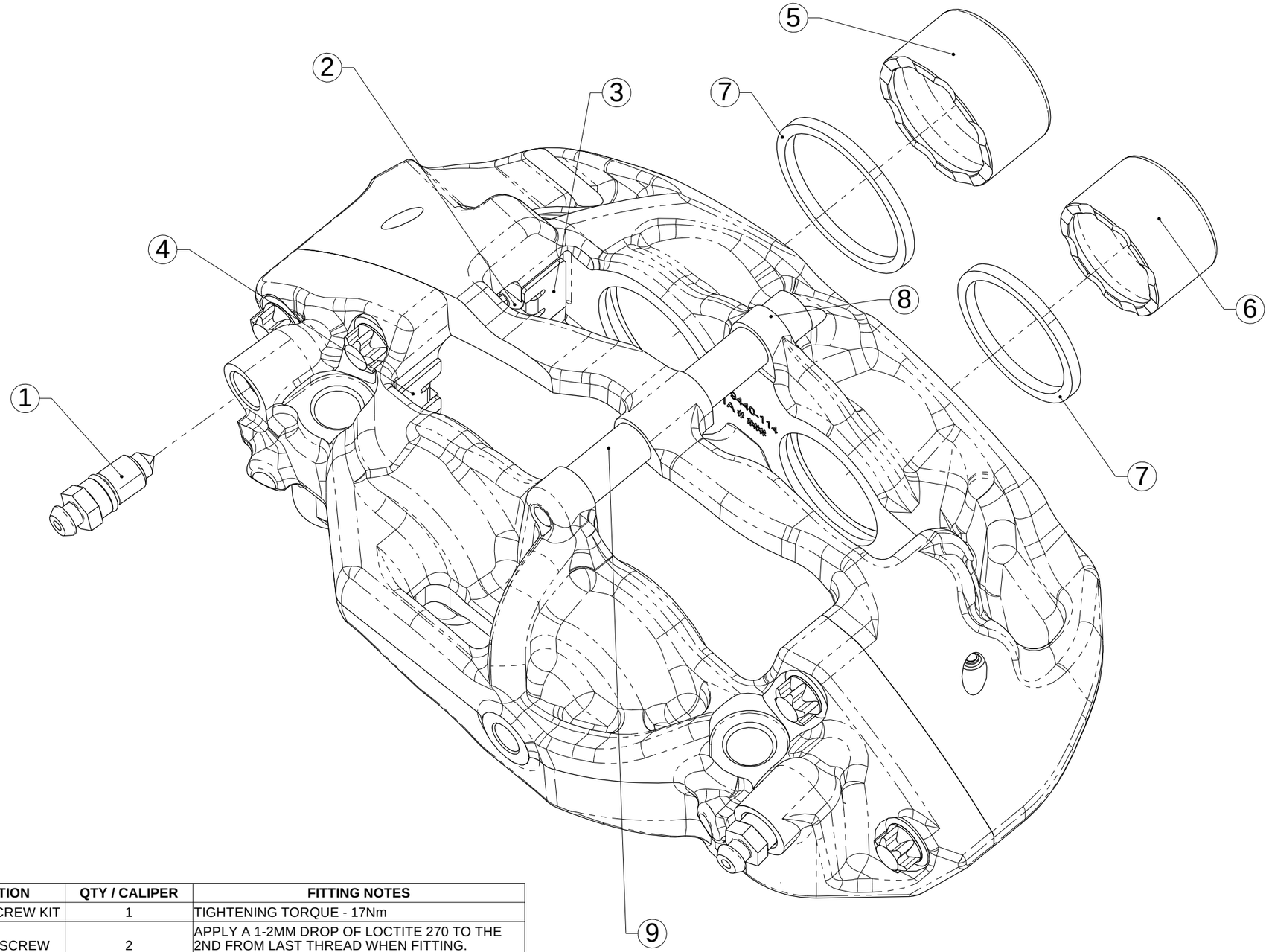

REF	PART NUMBER	DESCRIPTION	QTY / CALIPER	FITTING NOTES
1	CP3880-1	M10 BLEED SCREW KIT	1	TIGHTENING TORQUE - 17Nm
2	CP9440-116	M5 BUTTON SCREW	2	APPLY A 1-2MM DROP OF LOCTITE 270 TO THE 2ND FROM LAST THREAD WHEN FITTING. TIGHTENING TORQUE - 3.7Nm
3	CP9440-108	RH WEARPLATE	1	APPLY 736 RTV SILICONE SPARINGLY BEHIND THE ABUTMENT PLATE ENSURING ENTIRE CONTACT FACE IS COVERED. APPLY PRESSURE TO ABUTMENT PLATE WHEN FITTING TO ENSURE MINIMUM FILM THICKNESS AND AVOID ANY GAP. ENSURE ABUTMENT PLATE SITS CORRECTLY AGAINST CALIPER BODY BEFORE FITTING RETAINING SCREW.
4	CP9440-109	LH WEARPLATE		
5	CP9440-106	Ø1 5/8" SST PISTON	2	
6	CP9440-107	Ø36MM SST PISTON	2	
7	CP8518-HK	PISTON SEAL KIT	1	REFER TO PUBLICATION REF: P14.290 & P14.220
8	CP3796-121ST	M8 CAP SCREW	1	TIGHTENING TORQUE - 13.1Nm
9	CP9440-110	PAD RETAINER TUBE	2	

SCALE 1:1	SHEET 2 OF 2
DRAWN	J.HERITAGE
APPROVED	
DERIVED FROM	#

TITLE
GENERAL USE 4-PISTON BRAKE CALIPER

DRG NO. CP9440-1CD